MORE — CONNECT

MORE-CONENCT 4th training module

Ventilation and modular HVAC systems

Dr.sc.ing. Anatolijs Borodiņecs

Duration: 4 hours

Type: class room lectures

Introduction

MORE — CONNECT

- As the buildings are built for people not to consume/save energy it is vitally important also for nZEB to provide comfortable and non-harmful indoor air parameters for occupants. This usually involves designing and installing various HVAC systems. Just in case of nZEB the added challenge of keeping the energy consumption as low as possible comes into play.
- The primary objective of this learning module is to give information and present study results on how to evaluate possible heating, ventilation and air-conditioning solutions for nZEB multi apartment buildings.
- In scope of this module technology inventory and review of all necessary components that are necessary to climatize the buildings will be evaluated. A specific focus will be paid to modular solutions. The design specifics of embedded ventilation ducts and modular energy unit will also analyzed.
- The ventilation norms and guidelines for MORE-CONENCT project countries will be compared and discussed. The module will summarize a brief overview of different ventilation systems advantages and disadvantages. It will provide comparison of installation and running costs for various ventilation solution for Latvian case study.
- After completing this module individuals will be able to choose ventilation strategy considering building type, technical conditions and user behavior. Also knowledge on duct sizing and selection of ventilation units will be obtained.

Ventilation systems

MORE — CONNECT

Ventilation is one of the most complex systems as it has many possible solutions and variations. However it is one of the most important systems as it provides fresh air and in many cases is the main reason for bad IAQ and cause of Sick Building Syndrome.

The ventilation systems can be dived in three large groups according to types:

- natural ventilation,
- hybrid ventilation (mechanical exhaust ventilation),
- mechanical supply-exhaust ventilation
    - Apartment based ventilation system
    - Building based ventilation system

Learning tasks and methodology

MORE — CONNECT

- To evaluate possible ventilation solutions for nZEB multi apartment buildings in three European geoclusters
- To perform economic and technical comparison of different ventilation systems
- To develop introduction of modular solutions and integration of ventilation ducts into external insulation

- Determining the necessary ventilation air volumes in case of each country;
- Designing most common ventilation system types for an apartment;
- Estimating construction costs of ventilation system installing;
- Calculating and comparing the life cycle costs of each ventilation system including maintenance, necessary electrical energy and necessary energy for heating;
- Estimating practical solutions for integration of ventilation systems elements into limited technical space available in exiting post-war multi apartment buildings;

Geo-cluster concept

MORE — CONNECT

Geo-cluster concept illustrates trans-national areas where strong similarities are found in terms of climate, culture, construction typologies and other factors. During this paper the focus will be on GC 1 represented by Denmark, GC2 represented by Estonia and Latvia and GC4 represented by Portugal.

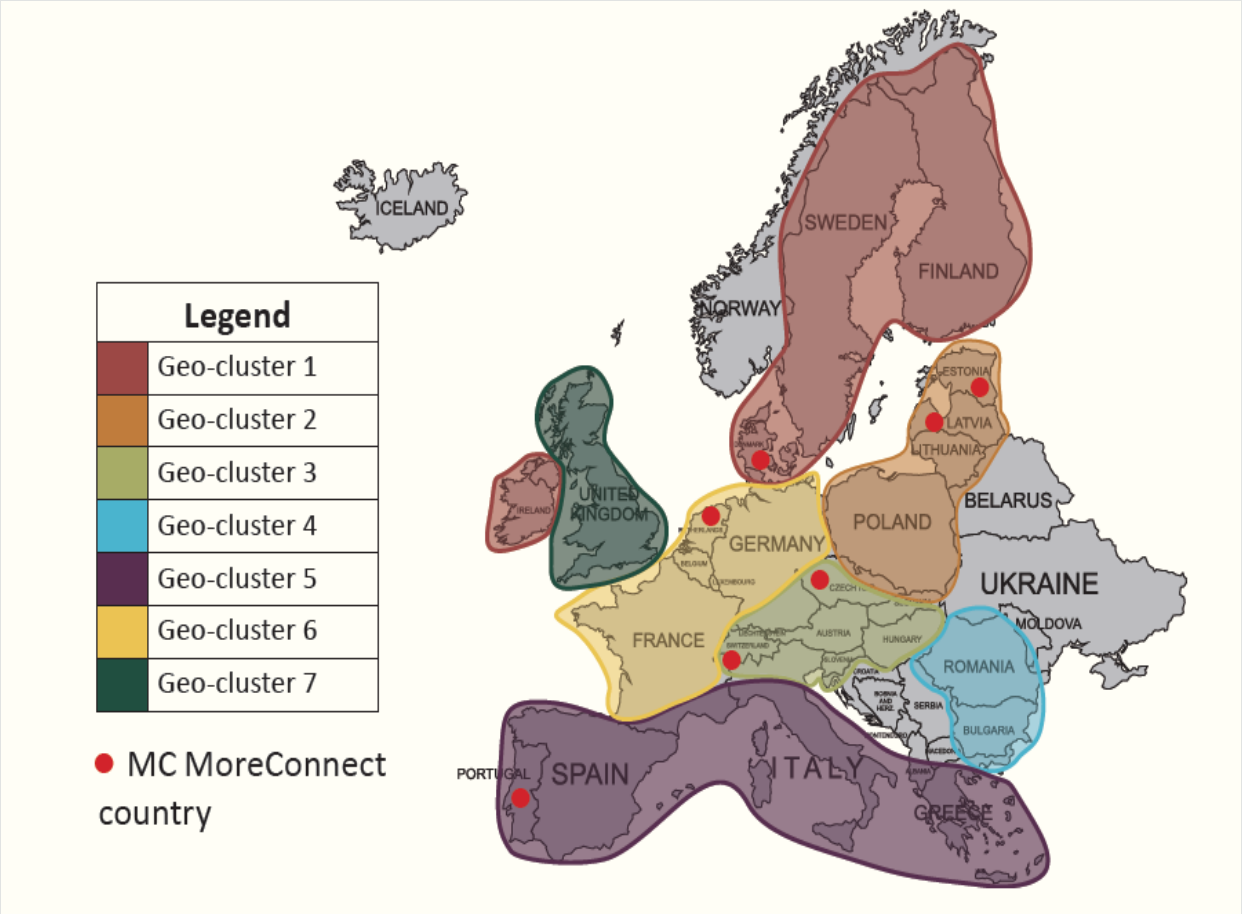

Fig. 1. EU H2020 MORE-CONNECT project geo-cluster

Ventilation air calculation

MORE — CONNECT

Table 1. Necessary residential ventilation airflow rates according to local regulations

Room type	Unit	Geo-clusters and countries*			
		GC1	GC2	GC2	GC4
		Denmark	Estonia	Latvia	Portugal
Toilet	m^3/h	36	36	25	30 to 60
Bathroom with toilet	m^3/h	54	54	50	45 to 90
Staircases	$m^3/(h \cdot m^2)$	1.08	1.25	1	n/a
Bedroom	$m^3/(h \cdot m^2)$	1.08	12 l/s (8 l/s in <11m^2 bedroom)	3	Dependent on room size. Approximate value is 1h^{-1}
Kitchen	m^3/h	72	30 (22 for 1 room apartment)**	60-90	60 to 120
Hallway	h^{-1}	0.5	-	0.5 - 1	n/a
Technical room	h^{-1}	0.5	0.5	0.5 - 1	-
Total supply air	$m^3/(h \cdot m^2)$	1.08	1.5	-	The sum of the supply air of all bedrooms and living rooms

Latvia – 4200 m^3/h; Denmark – 1250 m^3/; Estonia – 2745 m^3/h; Portugal – 4050 m^3/h

Ventilation air calculation (2)

MORE — CONNECT

Calculated ventilation air volumes for Latvian case study building

Room nr.	Room type	Supply air m³/h	Exhaust air m³/h
1	Bedroom	55 (90 for 2-room apartment)	-
2	Kitchen	-	90
3	Bathroom	-	50
4	Storage	-	-
Total for an apartment (m³/h)		55 (90)	140
Total for whole building (m³/h)		6 · 5 · 140 = 4200	

Calculated ventilation air volumes for Ėstonian case study building

Room nr.	Room type	Supply air m³/h	Exhaust air m³/h
1	Bedroom	86*	-
2	Kitchen	-	22 (30 for 2-room apartment)
3	Bathroom+WC	-	54
4	Storage	-	10
Total for an apartment (m³/h)		86*	86
Total for whole building (m³/h)		(5 · 86 + 119) · 5=2745	

Calculated ventilation air volumes for Denmark case study building

Room nr.	Room type	Supply air m³/h	Exhaust air m³/h
1	Bedroom	20	
2	Kitchen	-	72 - VAV
3	Bathroom	-	54 - VAV
4	Storage	-	-
Total for an apartment (m³/h)		40 (50)*	40 (50)*
Total for whole building (m³/h)		(5 · 40 + 50) · 5 = 1250	

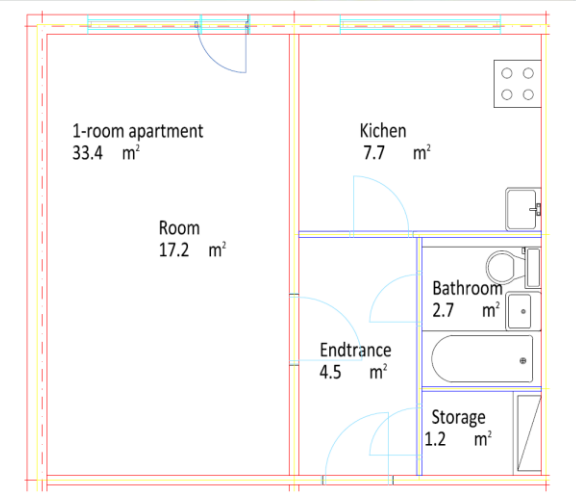

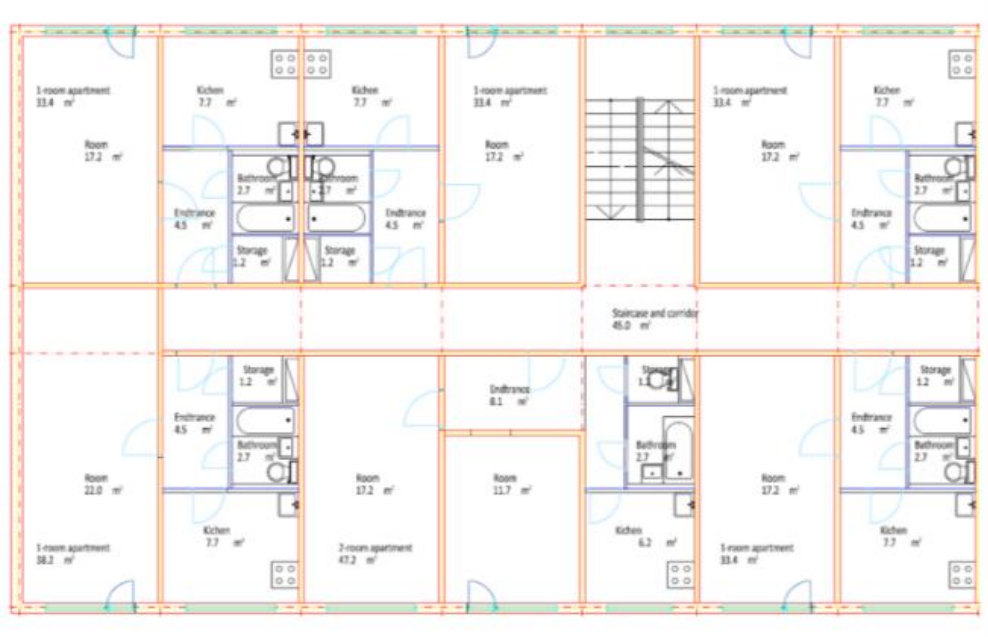

Fig. 2. (a) Plan of 1-room apartment of case building; (b) Plan of whole staircase section of case study building

Ventilation type selection (1)

MORE — CONNECT

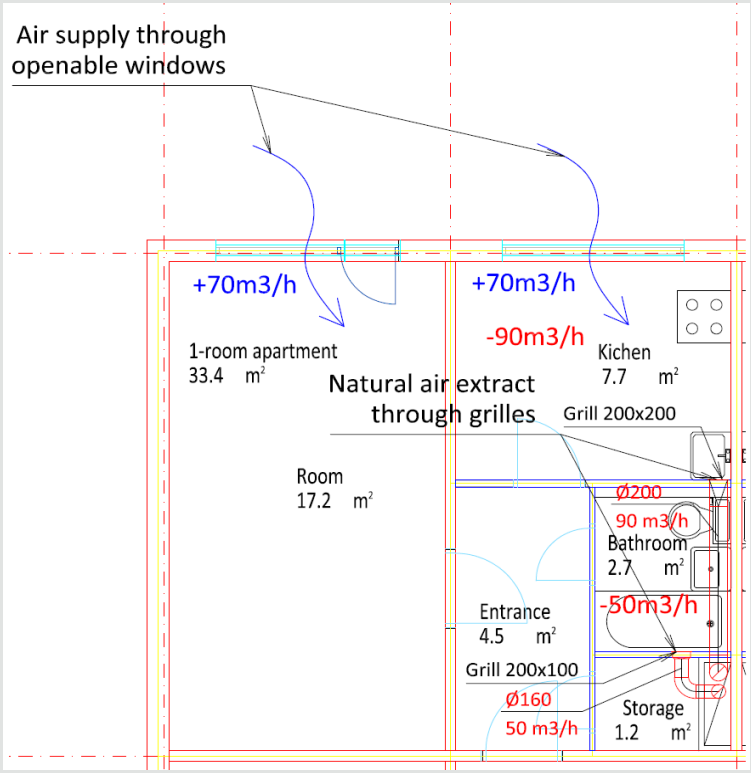

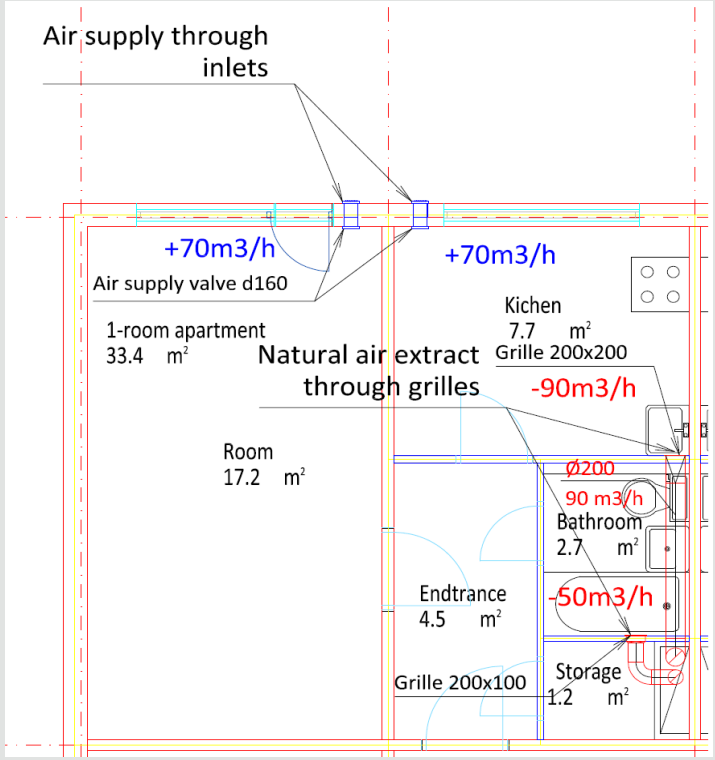

Ventilation system through openable windows and natural exhaust

Name	Size	Units	Quantity	Average price in EU for one unit (EUR)
Extract grille	200x100 mm	Pcs.	1	17.00
Extract grille	200x200 mm	Pcs.	1	20.00
Duct	Ø200 mm	m	2	1.90
Duct	Ø160 mm	m	3	1.50
Total cost with 30 % added				60.00

Ventilation system through air inlets and natural exhaust

Name	Size	Units	Quantity	Average price in EU for one unit (EUR)
Supply vents	Ø160 mm	Pcs.	2	120.00
Extract grille	200x100 mm	Pcs.	1	17.00
Extract grille	200x200 mm	Pcs.	1	20.00
Duct	Ø200 mm	m	2	1.90
Duct	Ø160 mm	m	3	1.50
Total cost with 30 % added				370.00

Ventilation type selection (2)

MORE — CONNECT

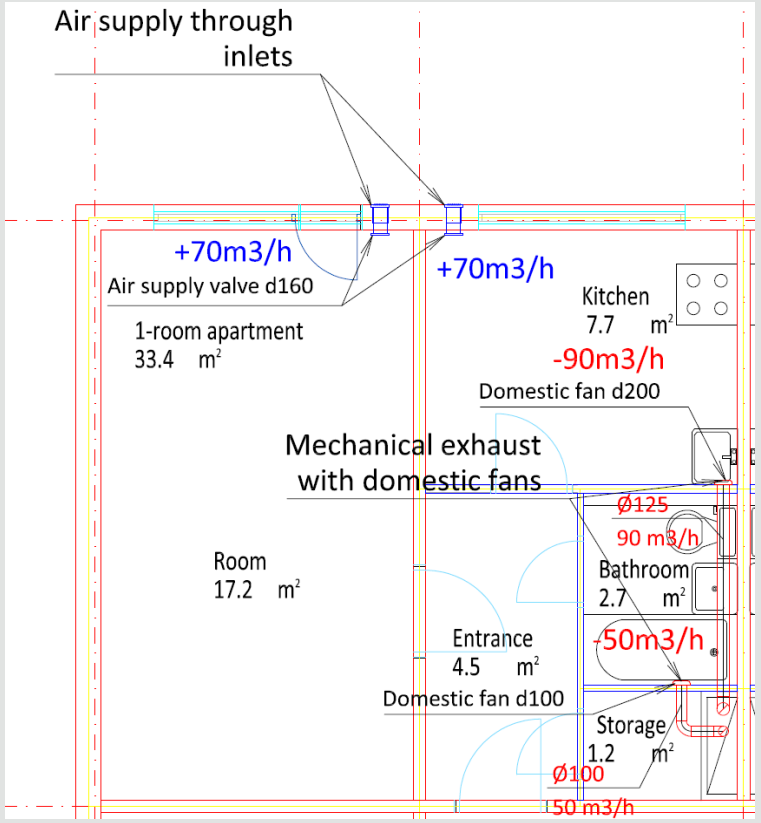

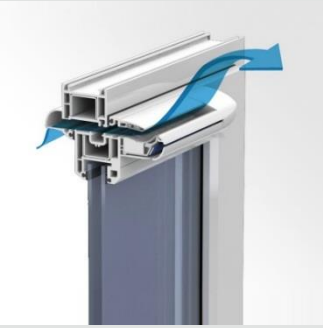

Hybrid type ventilation system with supply through air inlets and mechanical exhaust

Name	Size	Units	Quantity	Average price in EU for one unit (EUR)
Supply vents	Ø160 mm	Pcs.	2	120.00
Domestic type extract fan	Ø100 mm	Pcs.	1	70.00
Domestic type extract fan	Ø200	Pcs.	1	90.00

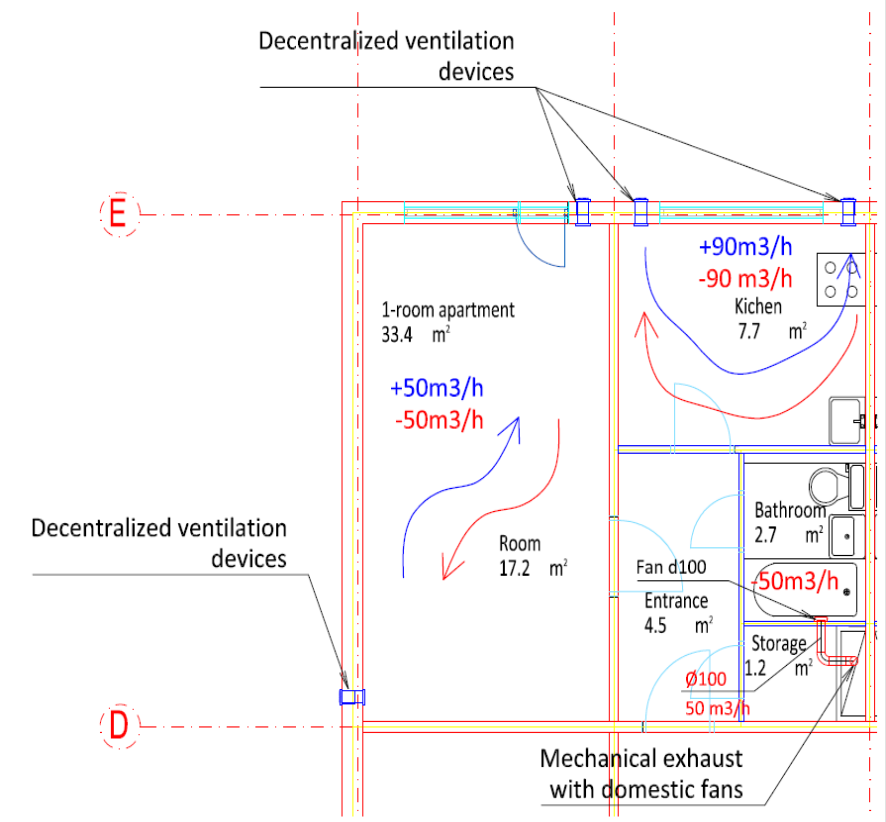

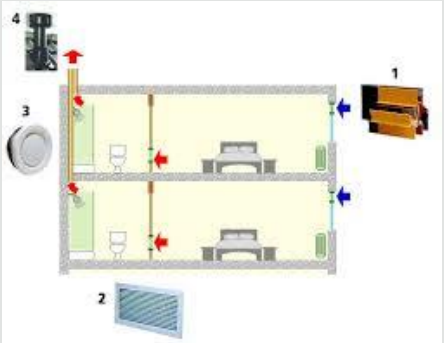

Decentralized ventilation system with room based mechanical supply and exhaust with room based heat recovery

Name	Size	Units	Quantity	Average price in EU for one unit (EUR)
Paired decentralized ventilation devices (50 and 90 m³/h)	-	Pcs.	4	485.00
Control unit	-	Pcs.	1	320
Domestic type extract fan	Ø100 mm	Pcs.	1	70.00

Ventilation type selection (3)

MORE — CONNECT

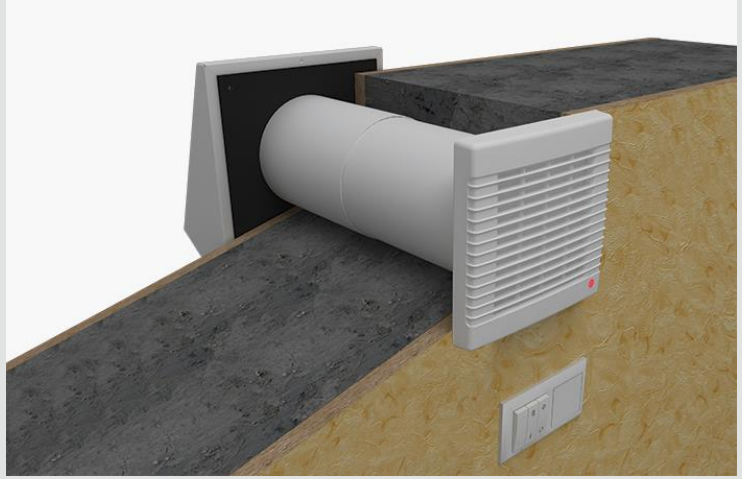

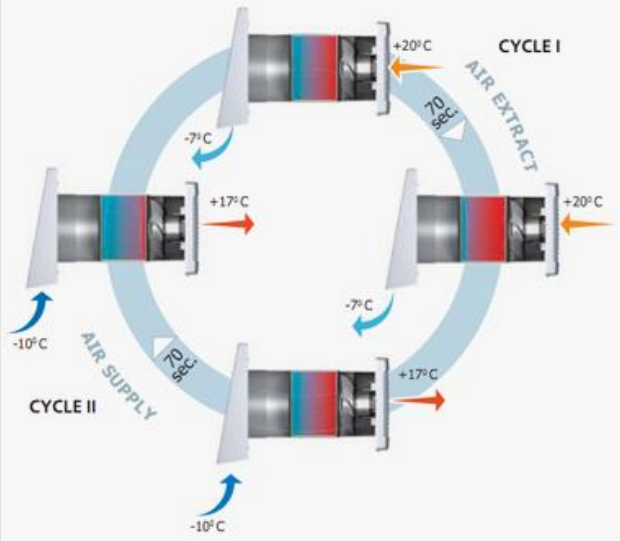

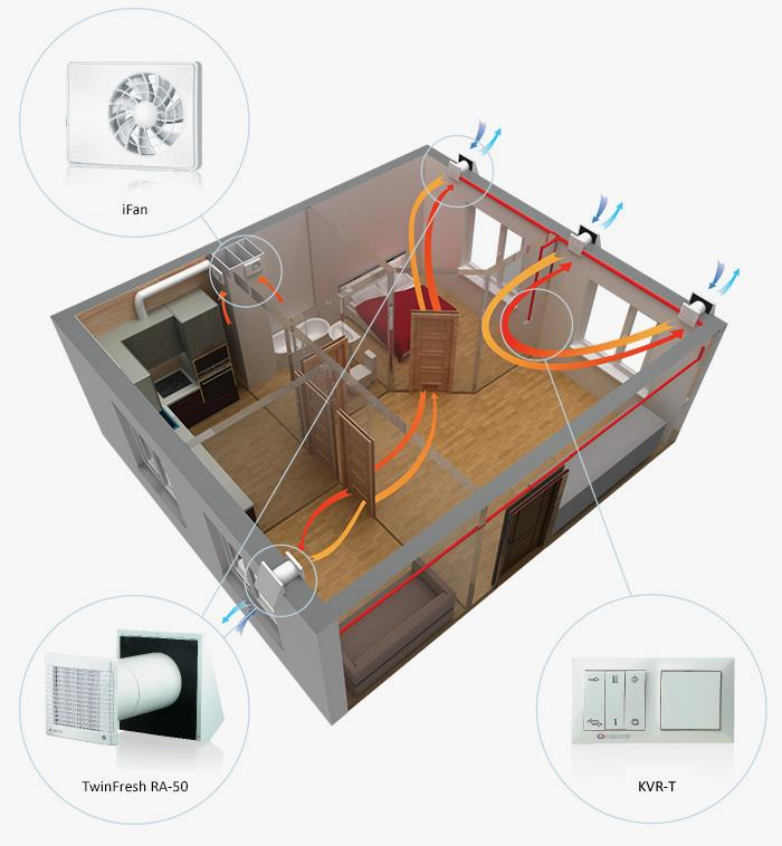

- High-tech ceramic energy accumulator with regenerating efficiency up to 90%
- Reversible EC ventilator with low energy demand from 3.5 up to 6.1 W and safe voltage 12 V
- Cena ap 350 EUR gabalā

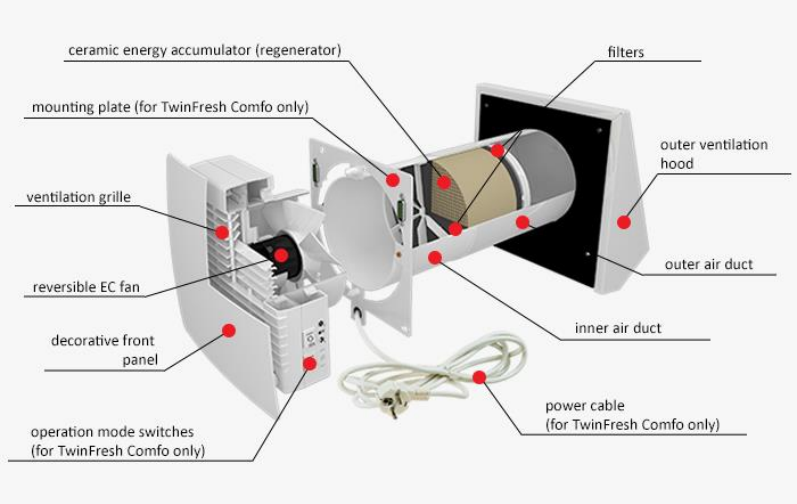

Ventilation type selection (4)

MORE — CONNECT

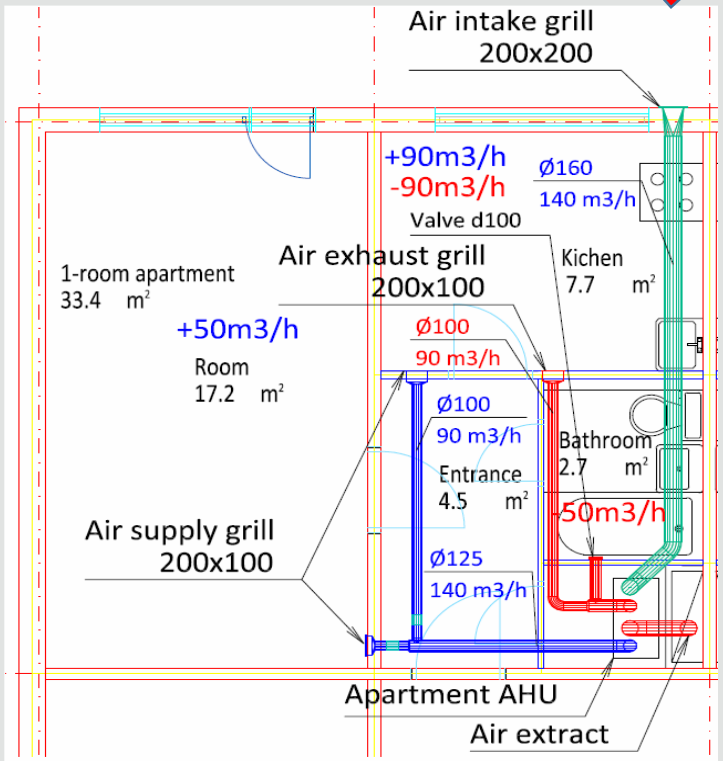

Decentralized ventilation system with apartment based mechanical supply and exhaust with apartment based heat recovery

Name	Size	Units	Quantity	Average price in EU for one unit (EUR)
AHU (140 m³/h)	-	Pcs.	1	1800.00
Air intake grill	200x200 mm	Pcs.	1	40.00
Extract air roof hood	Ø160 mm	Pcs.	1	200.00
Air supply grill	200x100 mm	Pcs.	2	17.00
Air exhaust grill	200x100 mm	Pcs.	1	17.00
Air exhaust valve	Ø100	Pcs.	1	5.00
Duct	Ø160 mm	m	10	1.50
Duct	Ø125 mm	m	4	1.20
Duct	Ø100 mm	m	7	0.90

Name	Size	Units	Quantity	Average price in EU for one unit (EUR)
For whole building				
Centralized AHU (4200 m³/h)	-	Pcs.	1	9500.00
Air intake grill	Ø560 mm	Pcs.	1	100.00
Extract air roof hood	Ø560 mm	Pcs.	1	700.00
Silencers	Ø560 mm/ L=1000mm	Pcs.	4	250.00
Duct	Ø560 mm	m	20	17.30
For apartment				
Air supply valve	Ø100 mm	Pcs.	2	5.00
Air exhaust grill	200x100 mm	Pcs.	1	17.00
Air exhaust valve	Ø100 mm	Pcs.	1	5.00

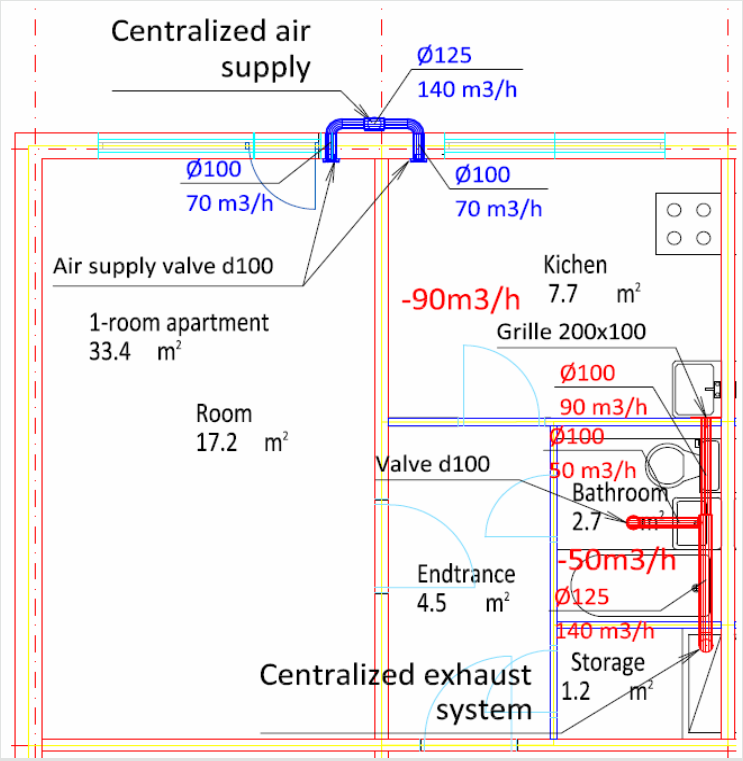

Centralized ventilation system with building based mechanical supply and exhaust with heat recovery

**The total cost includes the cost of all units located in the apartment and 1/30 of whole price for whole building units, as there are thirty apartments that would be served by the AHU*

Life cycle cost analysis

MORE — CONNECT

Comparison of installation and running costs for Latvian / Estonian case study (upper numbers are for Latvia, lower for Estonia)

Type of ventilation system	Installation costs[1)] (EUR)	Maintenance costs[2)] (EUR)	Heating costs[3)] (EUR)	Powering costs[4)] (EUR)	Total Annual costs (EUR)
Natural by opening windows and natural exhaust	1800	- -	8005 8110	- -	8005 8110
Natural by having inlet valves and natural exhaust	11 100	300 450	8005 8110	- -	8305 8560
Hybrid by having inlet devices in walls and mechanical exhaust	15 750	450 600	8005 8110	1155 1025	9610 9465
Decentralized mechanical supply and exhaust with heat recovery (room based system)	76 800	750 750	1600 (eff. 0,80) 1620 (eff. 0,8)	535 580 (0,16 W/m^3/h)	2885 2950
Decentralized mechanical supply and exhaust with heat recovery (apartment based system)	87 000	1050 1500	1200 (eff. 0,85) 2030 (eff. 0,75)	3455 (SFP 1.0) 3210 (SFP 1.6)	5705 6740
Centralized mechanical supply and exhaust with heat recovery	16 760	1000 1000	1600 (eff. 0,80) 2030 (eff. 0,75)	2070 (SFP 1.2) 4010 (SFP 2.0)	4670 7040

The cost comparison is done for one staircase of previously described case study building and with following assumptions:

1) Cost of installing all necessary equipment;

2) Annual maintenance cost for all necessary equipment for whole staircase section;

3) Cost of heating supply air for one heating season assuming the Heating degree days for base indoor temperature of +21,0°C for Latvia 4263, for Estonia 5656 (8) and assuming that the heating occurs by district heating system with following costs - for Latvia 55.55 EUR/MWh; for Estonia 65 EUR/MWh;

4) Annual cost of all energy necessary to power the ventilation devices for whole staircase apartment assuming that they are powered by electricity with the cost of 0.169 EUR/kWh for Latvia; 0.15 EUR/kWh for Estonia.

Life cycle cost analysis

MORE — CONNECT

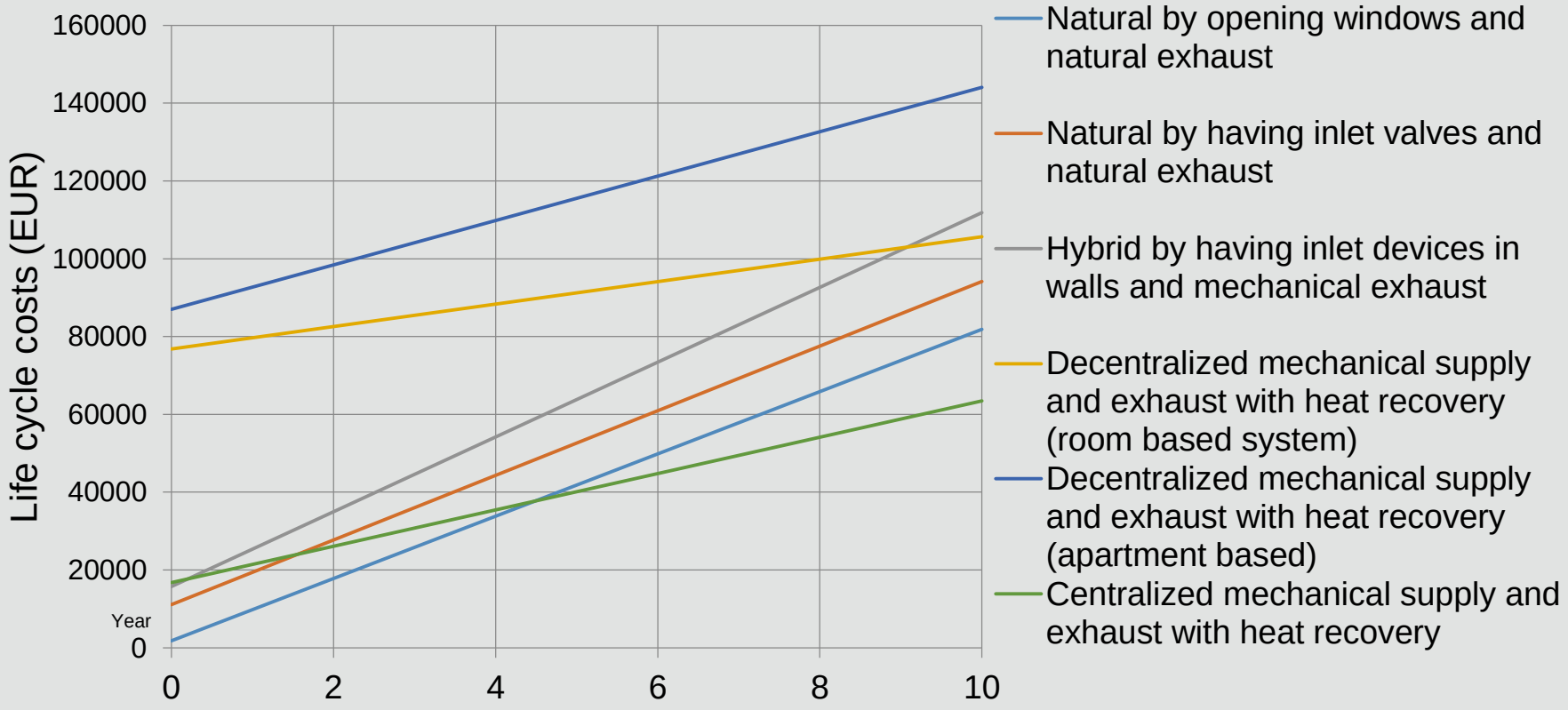

Comparison of ventilation systems

MORE — CONNECT

Type of ventilation system		Advantages	Disadvantages
Windows opening and natural exhaust		+Low investments and maintenance +Does not involve any technologies (solid) +Easily controllable +Does not affect architecture	-Incoming air does not heat up therefore causing draft -Incoming air does not go through filters therefore letting insects and dust -Low control options -Requires human interaction -Very low working efficiency during warm period of year -Let's through extra noise from outside -No possibilities for heat recovery -Affected by outside weather (wind, temperature)
Natural ventilation with inlet valves		+Relatively low investments and maintenance +Requires only some equipment +Easily controllable +Incoming air goes through filters therefore not letting insects and dust inside +Moderate control options	-Incoming air does not heat up therefore causing draft (can be solved by placing inlet valves behind radiators) -Requires some human interaction -Very low working efficiency during warm period of year -Let's through extra noise from outside -No possibilities for heat recovery -Affects building façade by requiring openings
Mechanical exhaust ventilation with natural supply through inlet valves		+Relatively low investments and maintenance +Requires only some equipment +Easily controllable +Incoming air goes through filters therefore not letting insects and dust inside +The exhaust fans can be equipped with light switch or moisture sensor +Stable working throughout the year	-Incoming air does not heat up therefore causing draft (can be solved by placing inlet valves behind radiators) -Let's through extra noise from outside -Low possibilities for heat recovery -Affects building façade by requiring openings
Mechanical supply-exhaust ventilation	Room based	+Requires only some equipment +High control options +Incoming air goes through filters therefore not letting insects and dust inside +The devices can be equipped with moisture sensor +Stable working throughout the year +With heat recovery therefore reducing heating costs and supplying warm air	-Very high investment costs -Let's through extra noise from outside and is a source of noise (relatively quiet) -Affects building façade by requiring openings -Low air volumes -Requires multiple devices for each apartment
	Apartment based	+All-in-one equipment includes all necessary parts +Complete control options +Incoming air goes through filters therefore not letting insects and dust inside +The devices can be equipped with moisture, CO_2, VOC or occupancy sensors +Stable working throughout the year +With heat recovery therefore reducing heating costs and supplying warm air	-Very high investment costs -Can be a source of noise if designed incorrectly -Requires place for ducts in shafts and rooms
	Building based	+All-in-one equipment includes all necessary parts +Average investment costs +High control options +Incoming air goes through filters therefore not letting insects and dust inside +The device can be equipped with moisture, CO_2 occupancy sensors +Stable working throughout the year +With heat recovery therefore reducing heating costs and supplying warm air	-Occupants are not in control of the centralized device -Can be a source of noise if designed incorrectly -Requires place for ducts in shafts, building envelope and rooms

Integrated duct design

MORE — CONNECT

Velocity in ducts	Round duct size, mm			
	Latvia (140 m3/h)	Estonia (119 m3/h)	Denmark (50 m3/h)	Portugal (135 m3/h)
<3 m/s	160	125	100	160
< 4m/s	125	125	100	125
< 6m/s	100	100	100	100

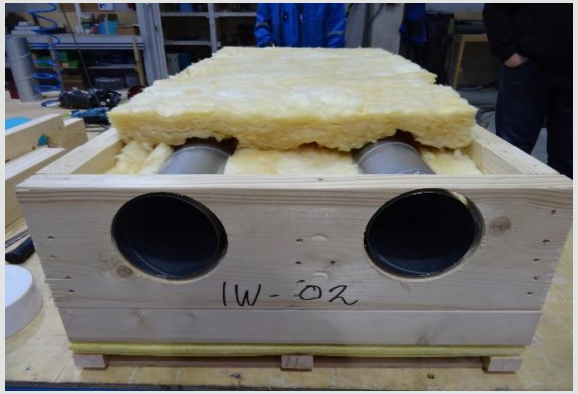

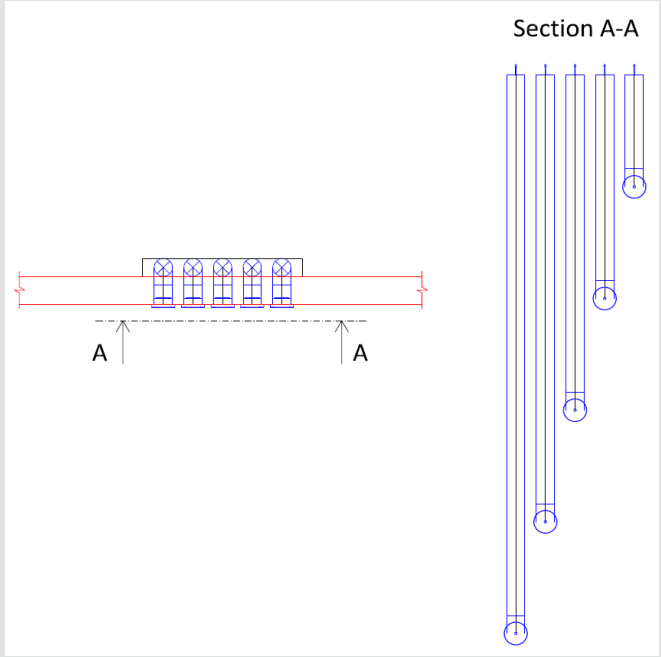

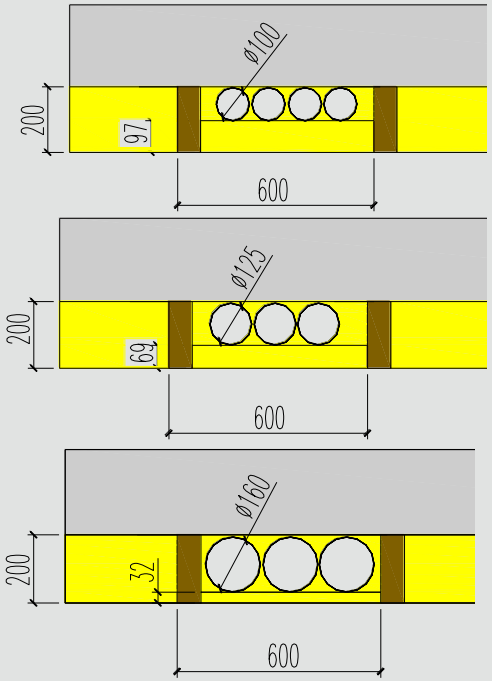

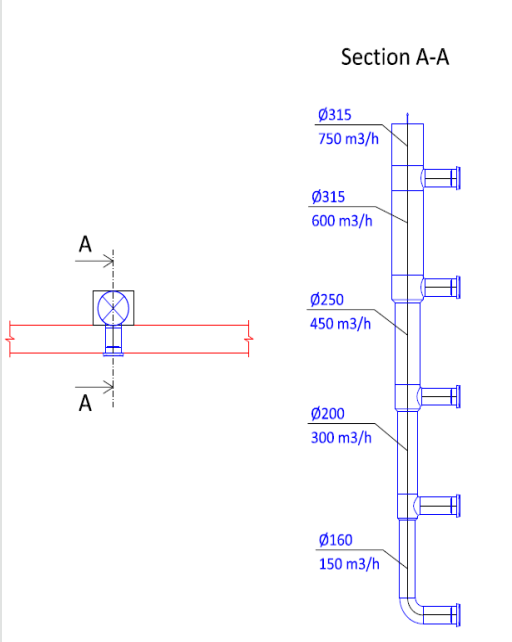

Fig. 4. Integration of ducts into prefabricated panel (approx. thermal transmittance is 0.18 W/(m²·K))

HVAC systems “house engine”

MORE — CONNECT

Typical components of modular HVAC unit are:

- ✓ Heat exchanger for heating loop;
- ✓ Hot water heat exchanger;
- ✓ Local energy source (gas boiler, heat pump, connection to external energy sources);
- ✓ Expansion tank;
- ✓ Air handling unit including ventilation heat recovery;
- ✓ In rarer case also cooling source.

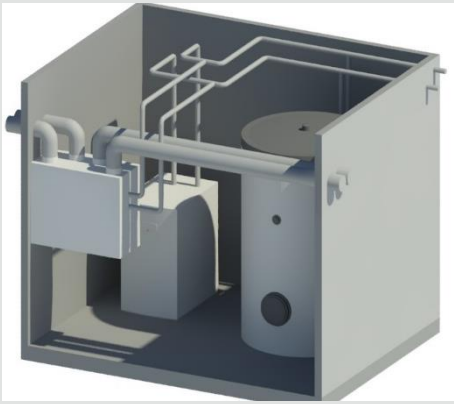

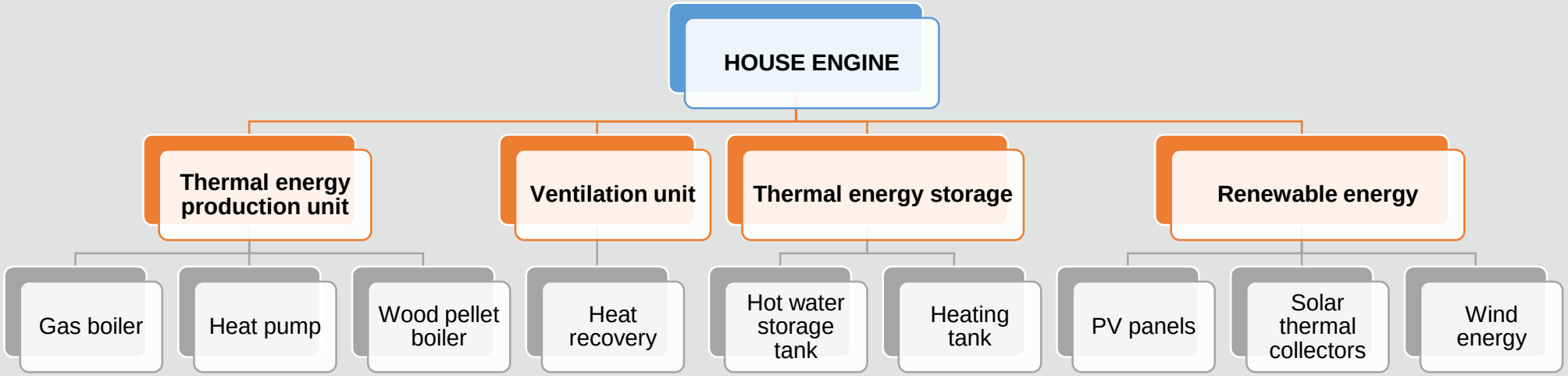

HVAC systems “house engine”

MORE — CONNECT

- Example of “engines” in Estonian pilot:
  - Ventilation
    - ½ building based balanced ventilation units with VHR
      - „engine“ on roof,
      - ducts in modular panel
    - ½ apartment based balanced ventilation units with VHR
      - „engine“ in balcony or in coatroom
      - ducts trough modular panel

pos.	neg
Ventilation is always on	Difficult to control
Quiet	Kitchen without VHR
Less disturbance of the residents.	

pos.	neg
Advanced control	Risk for higher noise
Kitchen with VHR	More ducts in apartment
Higher efficency of VHR	

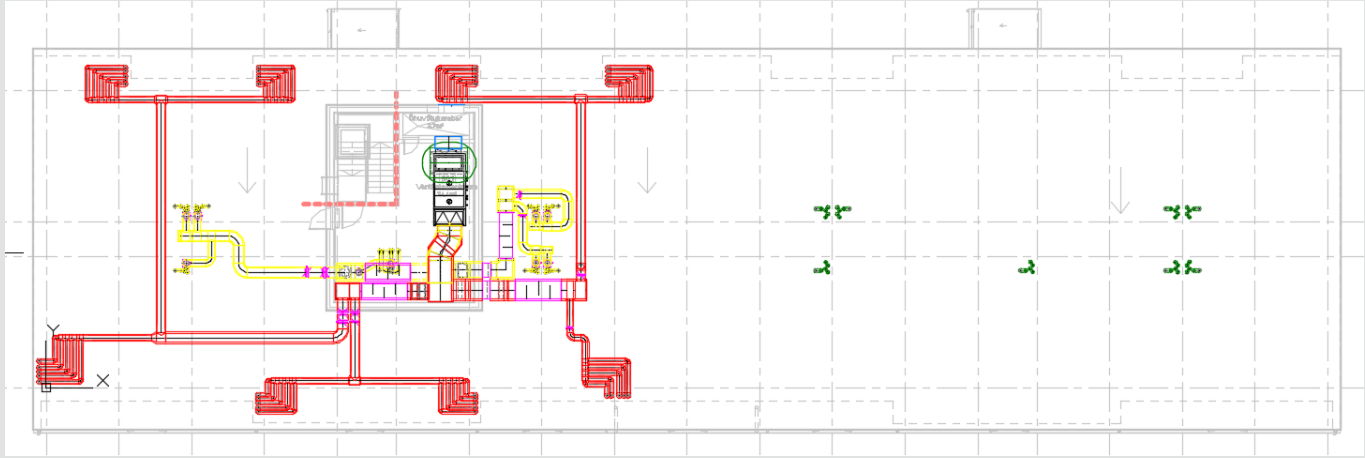

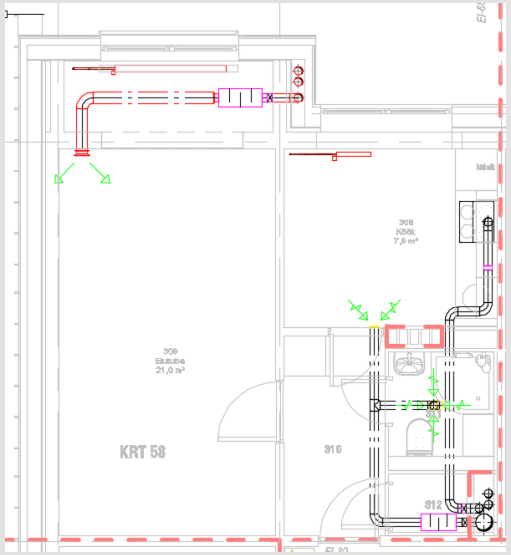

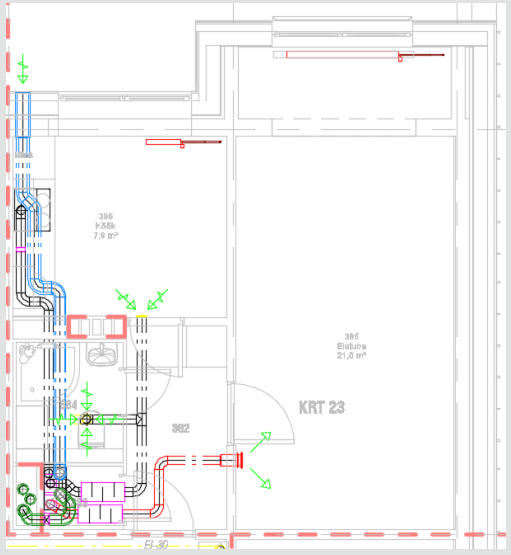

Practicla exercise

MORE — CONNECT

To choose, calculate and design ventilation systems for given building:

- Determine the necessary ventilation rate for each premise;
- Design the ventilation system;
- Make a rough cost estimate of designed system;
- Perform Life cycle cost analysis for chosen ventilation system.

•Initial data:

- •Building plans;
- •Location of building.